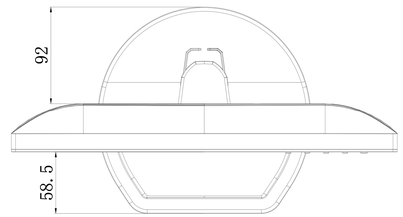

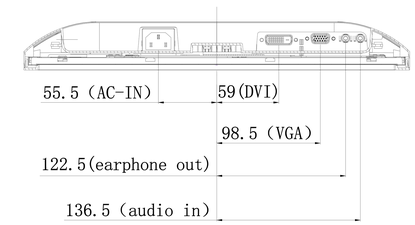

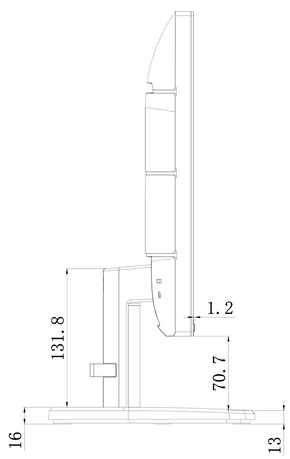

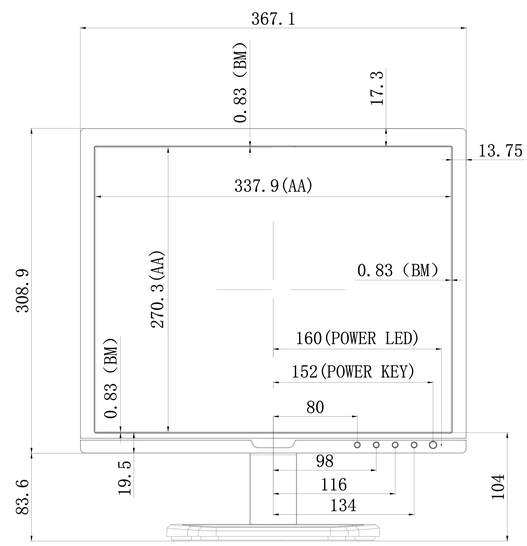

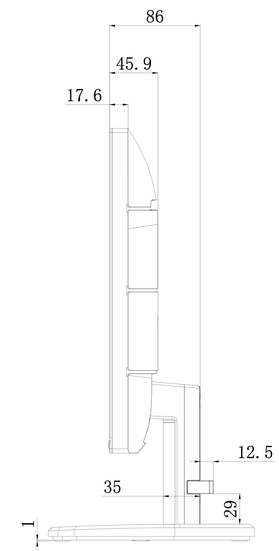

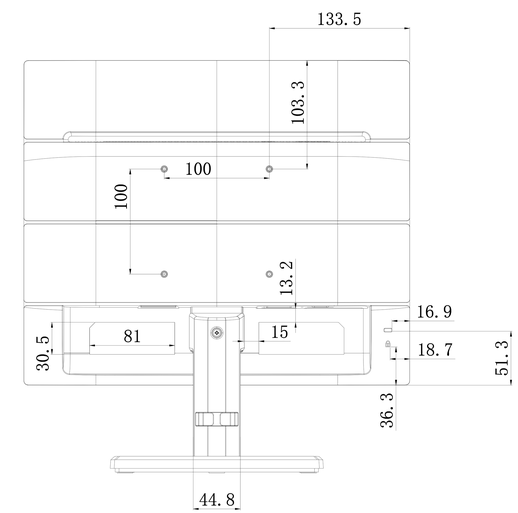

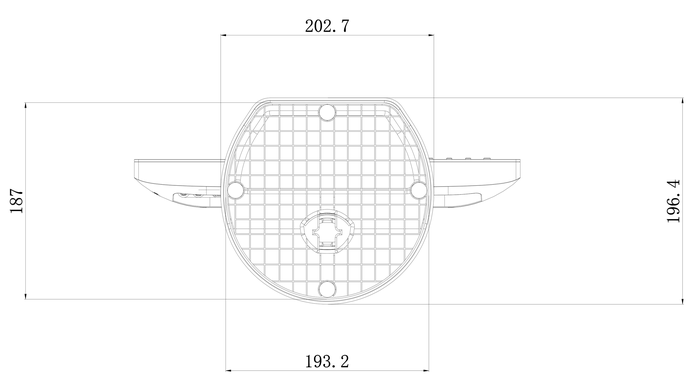

MODEL : PHP 170S9A		DRAWING : WENYI.WANG	
	PHP 170S9A		01 UPDATE MODEL NAME
NAME Wenyi.Wang	SUPERS .		
TY	CHECK	DATE 2018-12-17	