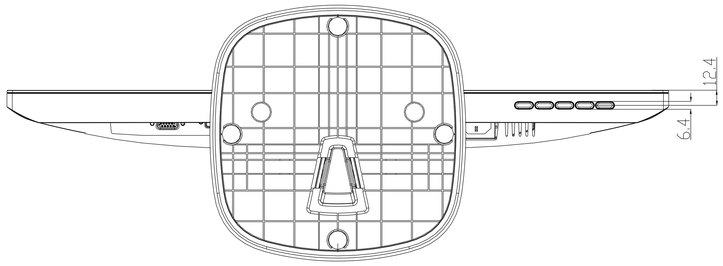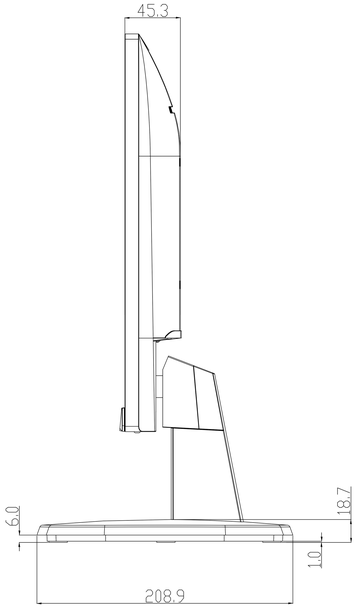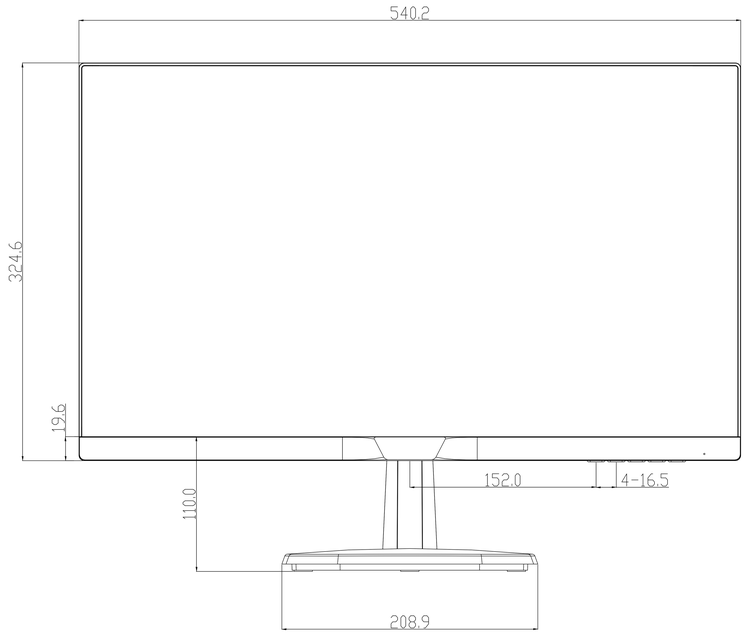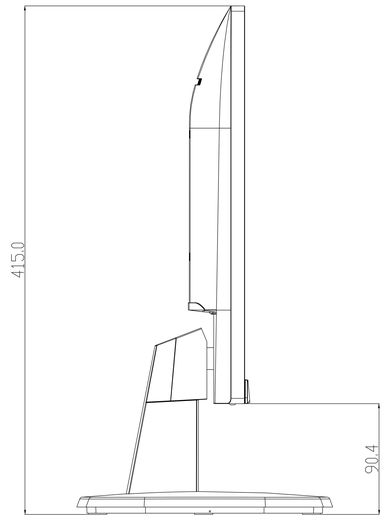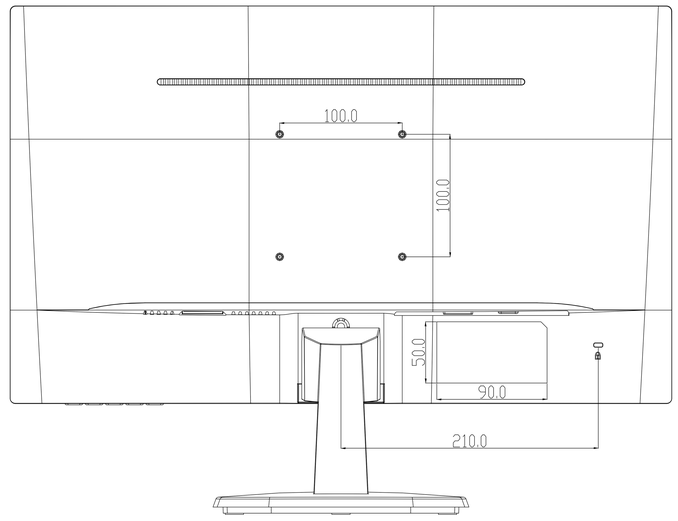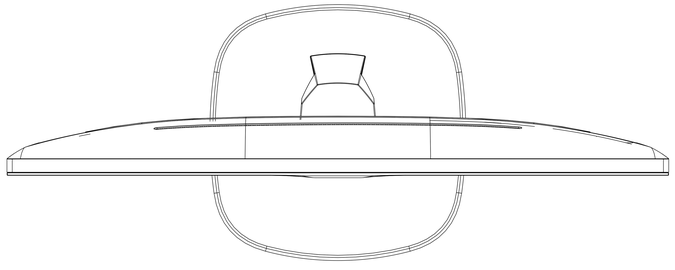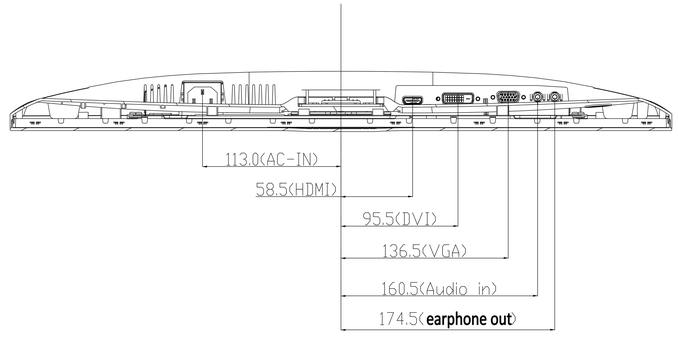243V7 SHT191-QDABX