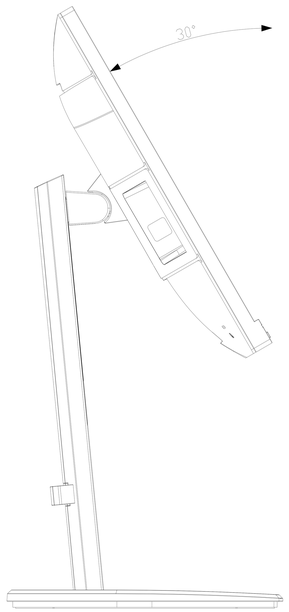

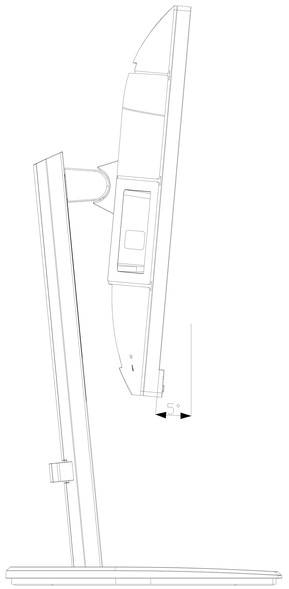

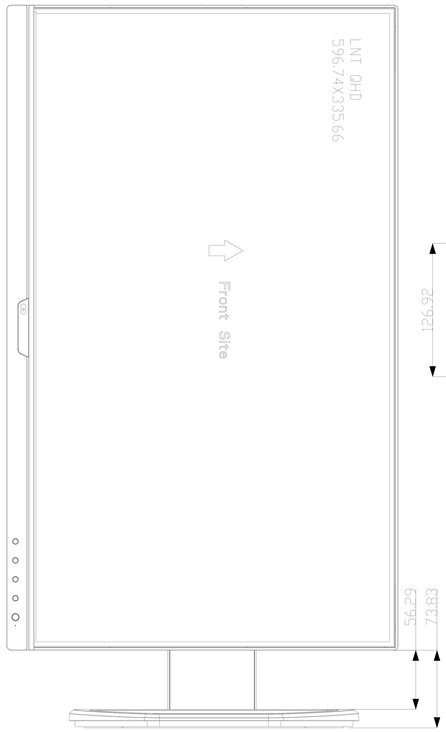

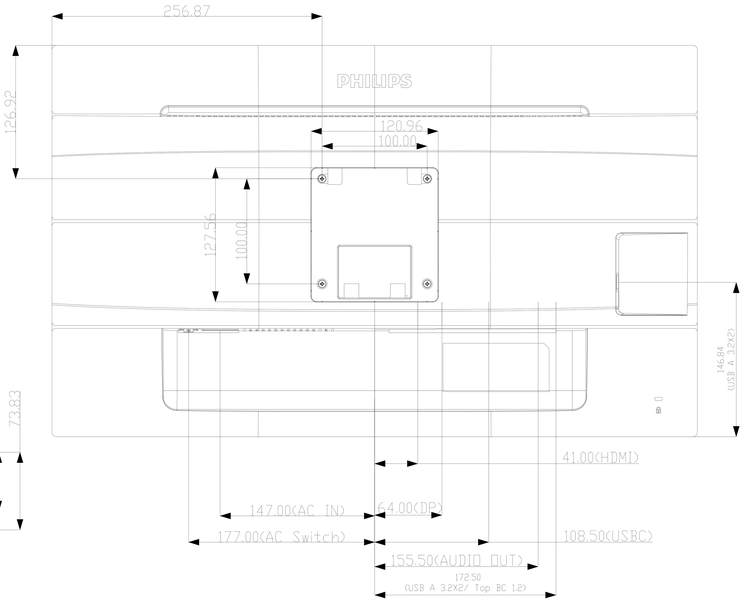

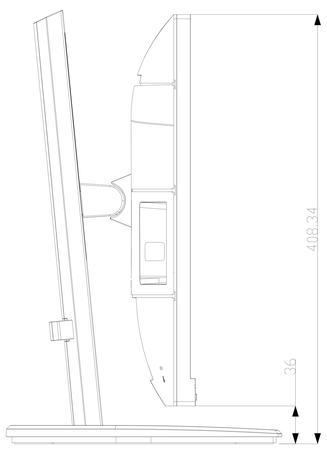

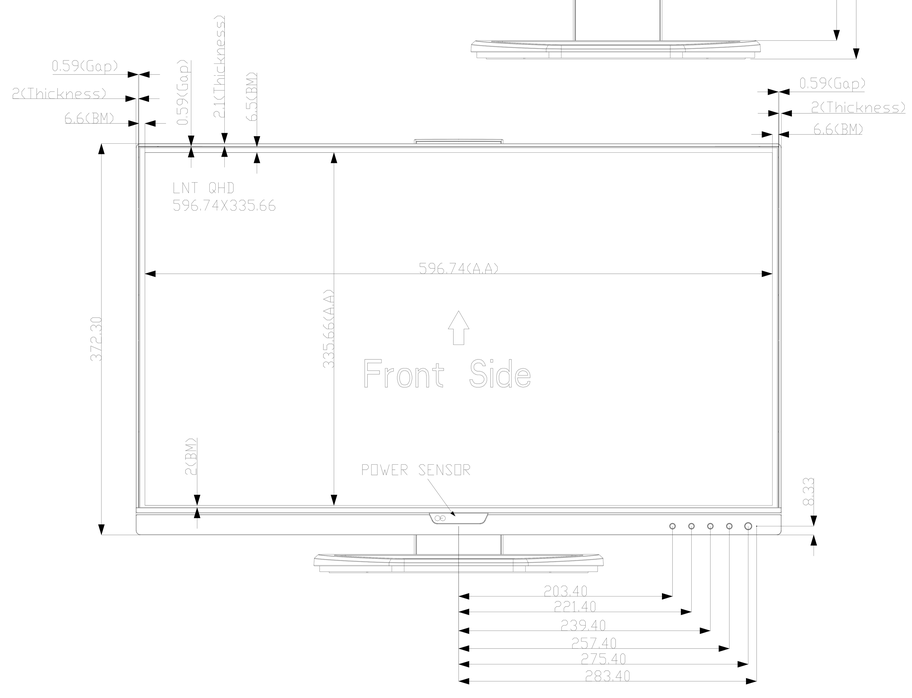

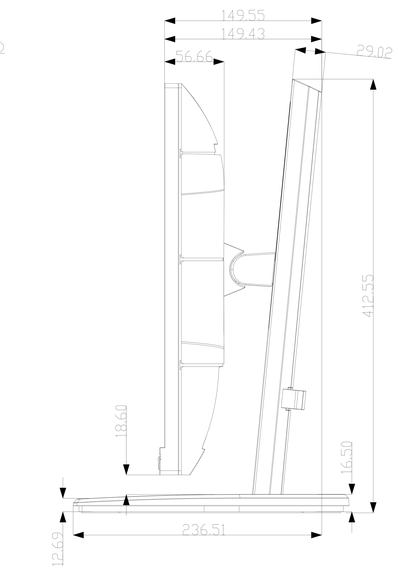

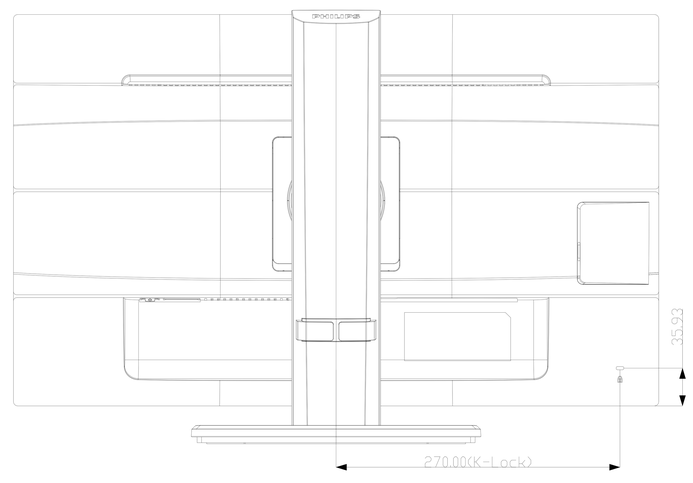

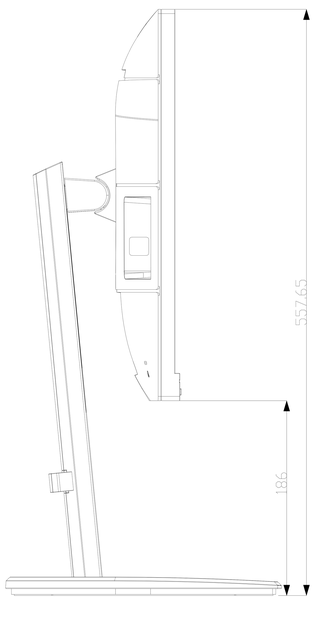

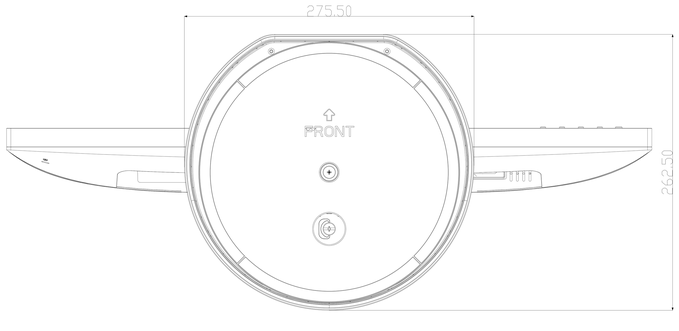

MODEL : 276B9		DRAWING :	
276B9 SHT191			00 1ST RELEASE 01
NAME Jacky Yang	SUPERS .		
TY CHECK	DATE 2020-07-28	© PHILIPS ELECTRONICS INDUSTRIES (TAIWAN) CO., LTD.	